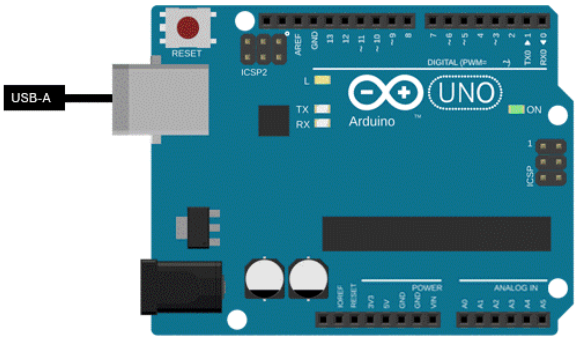

The current electronics setup is made from "shields" that connect to all (or most) of the pins in the arduino. They connect to the arduino in the order:

1. Sensor expansion shield

   Uses A0-3 for the data input of the temperature sensors

   Shield does not have connection pins D18-19 on the top rail, meaning all subsequent shields do not connect through those pins. As D18-19 exist also on the bottom rail, D18-19 remains connected

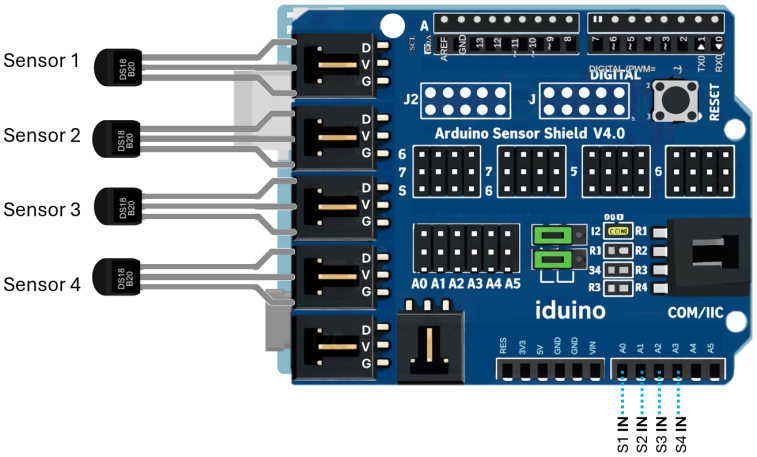

2. Motor Driver Shield

   Uses D3-5 & D8 for control of two pumps Pumps are externally powered through a 12V DC power supply. This power supply requires a connection to the Arduino's ground (see 3. Data Logging Shield)

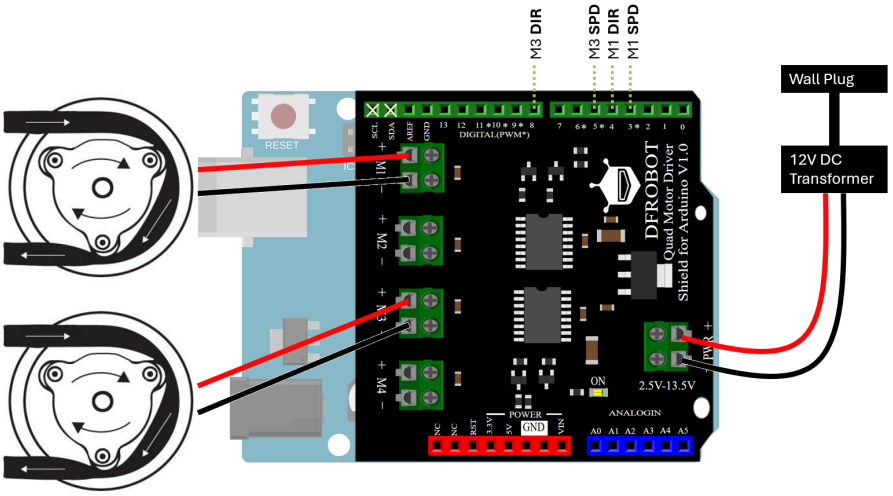

3. [Data Logging shield (with prototyping space)]

Uses D10-13 for the Data logging function
Uses D2, D9, D11 & D13 for the OLED display. The prototyping space is used to house a pin header connector unit, allowing a detachable but secure connection with the OLED display.
Uses D18-19 (labelled A4-A5) for the RTC function
Uses D7 for the switch input, and a 220Ω resistor to the GND pin to facilitate a pulldown
Uses D14-17 (labelled A0-A3) to facilitate a pullup for the temperature sensors with 4.7kΩ
A common 5V rail is used for the pullup resistors, switch and OLED display

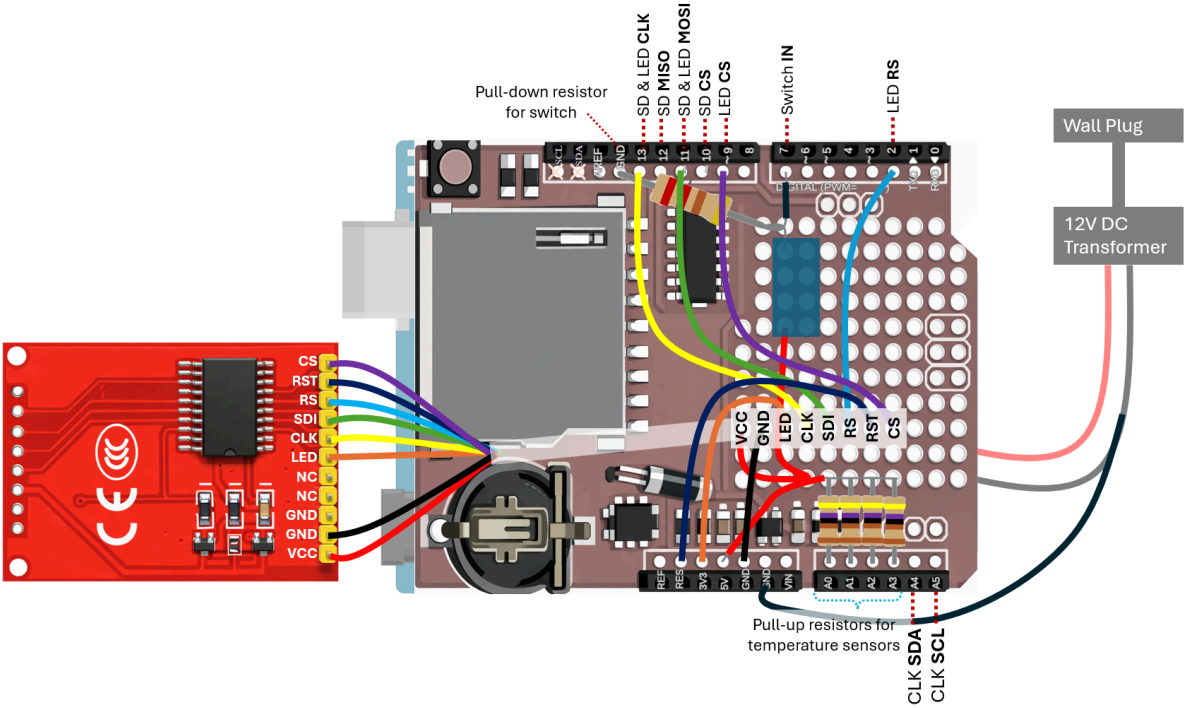

To-Do:
Use the information in this document, as well as your research from Arduino fundamentals to fill out this table, stating which modules each pin serves (motor, SD, RTC, OLED, switch, sensor, general Arduino) and the function the pin serves to the module.

PIN	Connected module/s	Function
D0	General Arduino	Serial Communication: RX - Receive data from computer
D1	General Arduino	Serial Communication: TX - Transfer data to the computer
D2	OLED display	OLED display control
D3	Motor Driver Shield	Control of pumps (speed control for M1)
D4	Motor Driver Shield	Control of pumps (direction control for M)
D5	Motor Driver Shield	Control of pumps
D6	General Arduino	PWM / Timer
D7	Switch	Switch input with pull-down resistor
D8	Motor Driver Shield	Control of pumps
D9	OLED display	OLED display control
D10	Data logging (SD)	Data logging (write channel)
D11	Data logging (SD), OLED display	Data logging (read channel) & OLED control
D12	Data logging (SD)	Data logging (CLK: timing channel)
D13	Data logging (SD), OLED display	Data logging (CS: device targeting channel) & OLED control
D14 (A0)	Sensor expansion shield, Data logging shield	Data input of the temperature sensors
D15 (A1)	Sensor expansion shield, Data logging shield	Data input of the temperature sensors
D16 (A2)	Sensor expansion shield, Data logging shield	Data input of the temperature sensors
D17 (A3)	Sensor expansion shield, Data logging shield	Data input of the temperature sensors
D18 (A4)	RTC	RTC function (I2C Data - SDA)
D19 (A4)	RTC	RTC function (I2C Data - SCL)